# Voltage Harmonics Compensator for High-Voltage Power Supplies

Marko Petkovsek, Ales Leban, Mitja Nemec, Danjel Voncina and Peter Zajec
University of Ljubljana, Faculty of Electrical Engineering, Trzaska 25, SI-1000 Ljubljana, Slovenia
marko.petkovsek@fe.uni-lj.si

***Abstract-*** **In this paper, a practical solution for suppression of voltage harmonics in high-voltage power supplies is proposed. The solution is based on three single-phase series active-power filters (SAPF) inserted in a common point of a synchronous generator (SG) through an injection transformer. Because of the SAPF position, implementation of low-voltage components enabling higher switching frequencies needed to compensate harmonics with a sufficient level of precision is fully justified. Combined with a sophisticated repetitive control algorithm and using a superior digital signal controller (DSC), an extremely low harmonic distortion in a large frequency span is achieved.**

## I. INTRODUCTION

When designing distribution transformers, especially those placed in a proximity of a residential area [1], a special attention has to be paid to minimization of an unwanted side effect, e.g. the transformer noise. Basically, there are two main reasons for the transformer noise. The first is magnetostriction and the second are mechanical vibrations, although we can generally talk only about the first one, e.g. the magnetostriction. Namely, when the transformer steel sheet is exposed to the magnetic field, a certain part of steel extends or contracts according to the level of the magnetic field. These microscopic deformations expand to the surrounding air producing some level of noise. Its amplitude is mathematically hard to determine since mechanical deformations caused by magnetostriction affect the surrounding core structure, thus producing a mixture of mechanical vibrations. Moreover, the deformations are not uniform for the whole volume of the laminated core and mechanical attenuation of a particular structure can vary widely, too.

There has been a lot of related research made recently by numerous authors leading to effective solutions. To reduce the noise at its source, a better core material with higher grades of magnetic orientation and low magnetostriction (e.g. various silicon steel strips and alloys) [2, 3] and special core mounting and assembling techniques – normally based on results of numerical analysis – should be used [4-8]. Another option is to reduce the magnetic-flux density in the transformer core and hence to reduce magnetostriction and consequently the noise. The second group of the noise suppression methods uses mechanical solutions, like special sound plates, barriers and enclosures mounted on the transformer tank. All of these approaches are nowadays mandatory in the transformer design stage and are normally customized for a broad supply voltage range with the frequency of 50 Hz (or 60 Hz). However, since the voltage spectrum - and as a consequence also the magnetic density - may vary during operation, the above countermeasures do not always give the aspired results in practice. Namely, if there are harmonics in the supply voltage, the noise level will increase in a similar way as in case of the fundamental harmonic [9, 10]. Evaluation of noise measurements that are not performed under the same supply conditions is therefore inappropriate. This is why testing of transformers at the manufacture site is made by using a stand-alone voltage supply – normally with an SG. At the first sight this solution seems to be a good choice since it provides for a constant voltage waveform independent from the variable grid states. However, when such a voltage source supplies a power transformer under test, it should also be free of harmonics to eliminate further thermal losses, mechanical vibrations, increased noise level and assuring more favorable specifications of the tested transformer. The presence of voltage harmonics in the SG output voltage is mostly due to the machine excitation. Since the excitation winding is distributed in the slots across the SG perimeter, the magnetic-field distribution in the air gap is not sinusoidal. Moreover, a non constant permeability of the air gap, pole shape, local magnetic saturation and non-concentrical rotor further increase voltage distortion.

## II. METHODS FOR HARMONIC CONTENT REDUCTION

A typical measurement set-up for testing distribution transformers consists of a high voltage SG and a matching transformer. Together they enable measurements at different voltage levels and connection set-ups (star, delta,…).

In general, an intuitive solution would of course be reducing harmonics at the SG site by optimizing its magnetic characteristics. As this is not always enough or is even impossible, more promising results are expected to be obtained if the harmonic reduction countermeasures are focused on consequences rather than on causes for the harmonic presence [11]. By doing so, the achieved reduction is independent both from the SG excitation level and the power supply configuration (star or delta connection).

The above solutions can be divided into two groups depending to the applied components; e.g. passive and active power filters. The passive power filters use a combination of resistors (R), inductors (L) and capacitors (C), whereas the

active power filters use passive and active components (manage the power flow). In order to operate and unlike is the case with passive filters, active filters normally need an additional (usually a DC) power supply.

### A. *Passive power filters*

Though using a conventional passive notch LC filter in suppressing harmonics can be achieved at low cost and high efficiency, this solution is effective only for a certain (tuned) frequency (or frequency band) to be canceled and is therefore inappropriate. Moreover, it is very hard to design a filter with a quality having a sufficiently high impedance compared to the impedance of the tested transformer to effectively compensate voltage harmonics.

### B. *Active power filters*

Active power filters can be divided into two subgroups: parallel active power filters (PAPF) and series active power filters (SAPF). In majority of cases, PAPFs are the main choice when selecting an active power filter. They are used in applications aiming at minimizing the harmonic content in the load current [12-14]. Basically, PAPF is a current source delivering higher current harmonics to the system. So, the sum of the load current and the contribution of the current from the active power filter contributes to the fundamental harmonic only. The insertion point depends on the reason causing the presence of harmonics – it can be placed closer to the main supply or closer to the load.

Unlike PAPF, SAPF is used in applications in which harmonics should be eliminated from the supply voltage spectrum. The reason for the presence of harmonics in the supply voltage is in design limitations (SG asymmetry) or in the load current harmonics generating a certain voltage drop on the impedance of the power supply grid. SAPF is basically a voltage source connected in series to the system voltage through an injection transformer. This configuration is also known as an active compensator and is usually used to suppress voltage dips in the supply system.

## III. Description of the Proposed Power Supply

As our implementation of the passive LC filter in the system did not assure sufficient voltage harmonic filtering, we used SAPF acting like a high-frequency voltage source that compensates voltage harmonics of a stand-alone SG. The proposed configuration is shown in Fig. 1 in which for the sake of simplicity only one phase is presented in detail. Since required superimposed harmonic level ($u_{f1}$) is considerably lower than the SG nominal voltage ($u_{s1}$), low-voltage components can be used to enable higher switching frequencies needed to compensate harmonics at a sufficient precision rate, as well. In particular, the total harmonic distortion (THD) should be kept more than a decade lower compared to the widely used distribution applications.

To sum up, the high precision rate, large frequency span of the compensator and high computational power needed to execute the control algorithm are the main features that put the proposed application far above the ones analyzed in references. The proposed active filter placement and its topology are advantageous, too. Here, contrary to the currently available solutions with SAPF based on a three-phase bridge converter topology, a single-phase bridge converter for each phase is used. In general, if correspondingly controlled, SAPF solutions can be realized with no external voltage source to supply the DC link. Consequently, a control algorithm can significantly affect filter performance as well as the required computational power. The DC link is therefore supplied with an external voltage source of a relatively low rated power. Namely, in theory, SAPF contributes only the reactive power, so no active power is transmitted through the injection transformer (Tr.) towards SG. Moreover, unlike common solutions, SAPF in Fig. 1 is connected in series with open windings of a star-connected SG on the side of the common point, thus reducing the need for installing an equipment with a high insulation-breakdown capability.

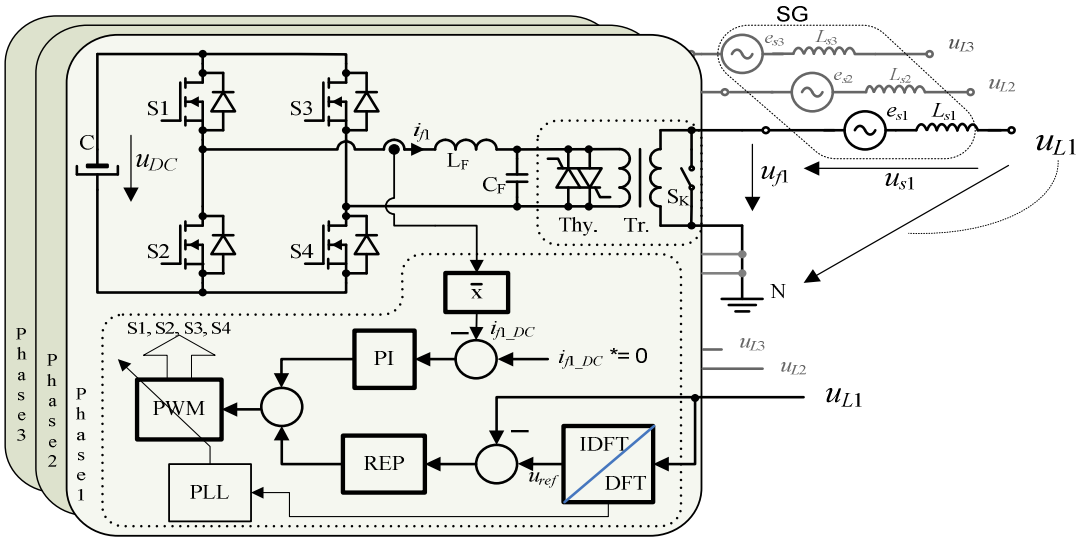


Fig. 1. Diagram of the proposed system.

The power stage of the prototype presented in Fig. 1 consists of three subunits, e.g. a MOSFET transistor full bridge, an output low-pass LC filter for switching ripple suppression and an injection transformer with its secondary winding actually contributing to the common output voltage of the system. Anti-parallel thyristors (Thy.) on the primary side of the injection transformer and a power switch ($S_K$) on the secondary side are installed for protection purposes. Namely, in case of the SAPF idle state, both components are in a conductive mode. In this way, there is no current flowing from or to the SG high power side and SAPF is practically disconnected from the system. When SAPF is active, both thyristors and the power switch are in their off state, so the voltage harmonics from SAPF can be transformed to the secondary side of the injection transformer.

## IV. Implemented Control Algorithm

The proposed SAPF needs a complex control algorithm that can be divided into three functional segments: a voltage feedback loop, a DC current feedback and a PLL loop, as depicted in Fig. 1. In this chapter, a brief insight into the complete control algorithm and its implemented functions is given.

Based on a DFT/IDFT (Discrete and Inverse Discrete Fourier Transform) block, we derive an error signal for a repetitive voltage controller (REP) as a difference between reference signal $u_{ref}$ and actual voltage $u_{L1}$. This type of the controller was chosen to meet the main requirement of a low steady-state error, whereas the speed of the controller response was not a decisive factor.

The preferred frequency span of the voltage controller was based on the SG voltage spectrum. In the final application, the controller frequency span was set to 5 kHz, while its sampling frequency was set to 51.2 kHz. In this way, 1024 samples per the fundamental period (50 Hz) were guaranteed. Yet, it should be noted that the voltage signal was actually acquired at a four-times higher frequency (204.8 kHz). This oversampling and the subsequent signal averaging improves the signal-to-noise ratio [15] and lowers the requirements for an input anti-aliasing filter. Besides, the power stage PWM block was designed to run at twice the sampling frequency (102.4 kHz) thus minimizing the output LC filter size. The applied frequency relationships – affected by the built-in PWM timer - are shown in Fig. 2.

For the repetitive controller to work properly, the line voltage sampling was synchronized with the period of the fundamental harmonic attained by using a PLL loop (Fig. 3). Apart from locking reference signal $u_{ref}$ to the fundamental period of the generated supply voltage, it is even more important that the sampling instant of a particular $n$-th sample occurs at the same position in terms of the fundamental period. However, contrary to the typical repetitive control applications with the device inherently generating the reference signal as a multiple of the internal clock signal [16, 17], this is not the case in our situation.

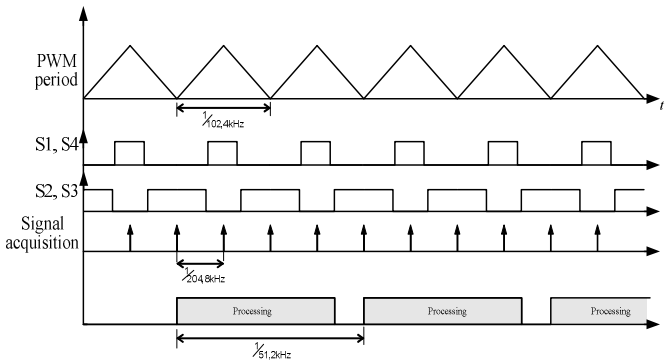


Fig. 2. Timing diagram of sampling, switching and algorithm execution.

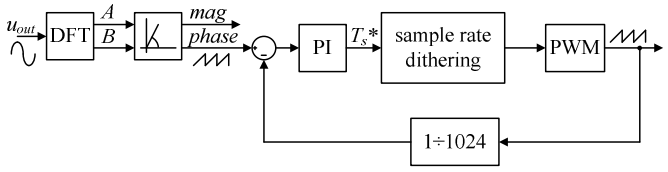


Fig. 3. PLL block scheme.

As the system operates only in steady states in which the signal frequency changes slowly (if at all) and the lock-in speed is not a design priority, advanced PLL techniques were not used because the classical PLL scheme worked satisfactorily.

Finally, to maintain the SAPF DC current near zero and therefore to avoid saturation of the injection transformer, a DC current controller was implemented into the control scheme.

## V. Experimental Results

To verify the proposed power supply topology and its control algorithm with each of the implemented functions, a series of measurements was performed on SG ($P_n$ = 40 kVA, $U_n$= 400 V, $n_n$ = 1500 min$^{-1}$) and a SAPF laboratory model (supplied with a DC link voltage of 60 V).

Firstly, the SG voltage was measured at different excitation levels and loads to detect any correlation between the load and the no-load voltage spectrum. As expected, the presence of harmonics in the voltage spectrum is predominantly a matter of the SG magnetic design and does not change significantly with the load.

In Fig. 4, a sample of the SG line voltage and its spectrum are presented without the active compensator. Although in general assumed sinusoidal, the SG voltage is heavily distorted. The presence of the voltage harmonics – especially beyond the frequency of 1 kHz – can be clearly observed from the voltage spectrum, resulting in a total harmonic distortion (THD) of 6.7 %.

For the same operating conditions shown in Fig. 4 and with the proposed active compensator, the overall system voltage changed notably, as depicted in Fig. 5. As also observed from the voltage spectrum, higher harmonics were significantly suppressed, in this case resulting in THD of 0.29 %.

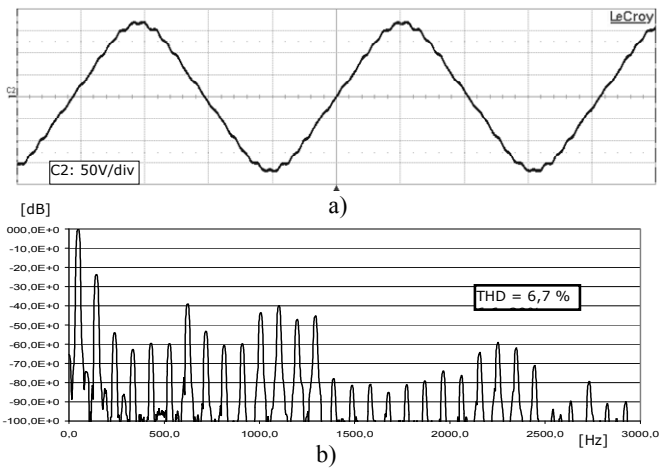


Fig. 4. Generator voltage (a) and its spectrum (b) without SAPF.

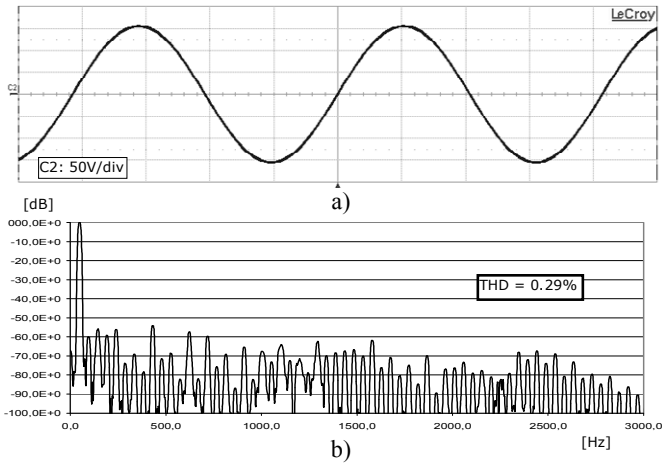


Fig. 5. Output voltage (a) and its spectrum (b) with SAPF active.

## VI. CONCLUSION

A low-voltage series active power filter was successfully implemented as a harmonic compensator in reducing the voltage spectrum of a high-voltage synchronous generator. A single-phase topology of SAPF was chosen in order to: i) allow for a modular approach and simplify maintenance, ii) achieve harmonic suppression irrespective of voltage disproportions among phases, iii) enable the usage of the MosFET transistors with a high switching frequency needed to compensate harmonics with a sufficient precision, iv) simplify control algorithm complexity. Also, the proposed connection of SAPF close to the ground potential reduces insulation demands of the filter's components.

The proposed topology enables the applied repetitive controller to attenuate the harmonic components up to 5 kHz with a precision rate guaranteeing THD to reduce down to 0.3%. Such low distortion is achieved by using the proposed digital filters and particularly the PLL concept with a dithering algorithm that minimizes the sampling window limit-cycle oscillations. The use of the proposed control scheme with the DSC realization technique proves that by applying modern control techniques, the high-performance DSC can significantly improve the voltage quality of rotating power generators demanding no special knowledge about their design.

## REFERENCES


[1] R. S. Girgis, M. S. Bernesjö, S. Thomas, J. Anger, D. Chu and H. R. Moore, "Development of ultra-low-noise transformer technology," IEEE Transactions on Power Delivery, vol. 26, no. 1, pp. 228 -234, Jan. 2011.

[2] D. Azuma and R. Hasegawa, "Audible noise from amorphous metal and silicon steel-based transformer core," IEEE Transactions on Magnetics, vol. 44, no. 11, pp. 4104 -4106, Nov. 2008.

[3] Y. -. Chang, C. -. Hsu, H. -. Chu and C. -. Tseng, "Magnetomechanical vibrations of three-phase three-leg transformer with different amorphous-cored structures," IEEE Transactions on Magnetics , vol. 47, no. 10, pp. 2780 -2783, Oct. 2011.

[4] G. Loizos, T. D. Kefalas, A. G. Kladas and A. T. Souflaris, "Flux distribution analysis in three-phase si-fe wound transformer cores," IEEE Transactions on Magnetics, vol. 46, no. 2, pp. 594 -597, Feb. 2010.

[5] Y. Gao, K. Muramatsu, M. J. Hatim and M. Nagata, "The effect of laminated structure on coupled magnetic field and mechanical analyses of iron core and its homogenization technique," IEEE Transactions on Magnetics, vol. 47, no. 5, pp. 1358 -1361, May 2011.

[6] Y. Gao, K. Muramatsu, M. J. Hatim, K. Fujiwara, Y. Ishihara, S. Fukuchi and T. Takahata, "Design of a reactor driven by inverter power supply to reduce the noise considering electromagnetism and magnetostriction," IEEE Transactions on Magnetics, vol. 46, no. 6, pp. 2179 -2182, Jun 2010.

[7] Y. -. Chang, C. -. Hsu and C. -. Tseng, "Magnetic properties improvement of amorphous cores using newly developed step-lap joints," IEEE Transactions on Magnetics, vol. 46, no. 6, pp. 1791 - 1794, Jun 2010.

[8] Y. Gao, M. Nagata, K. Muramatsu, K. Fujiwara, Y. Ishihara and S. Fukuchi, "Noise reduction of a three-phase reactor by optimization of gaps between cores considering electromagnetism and magnetostriction," IEEE Transactions on Magnetics, vol. 47, no. 10, pp. 2772 -2775, Oct. 2011.

[9] T. D. Kefalas and A. G. Kladas, "Harmonic impact on distribution transformer no-load loss," IEEE Transactions on Industrial Electronics, vol. 57, no. 1, pp. 193 -200, Jan. 2010.

[10] S. Somkun, A. J. Moses and P. I. Anderson, "Mechanical resonance in nonoriented electrical steels induced by magnetostriction under pwm voltage excitation," IEEE Transactions on Magnetics, vol. 44, no. 11, pp. 4062 -4065, Nov. 2008.

[11] L. Luo, Y. Li, J. Xu, J. Li, B. Hu and F. Liu, "A new converter transformer and a corresponding inductive filtering method for hvdc transmission system," IEEE Transactions on Power Delivery, vol. 23, no. 3, pp. 1426 -1431, Jul 2008.

[12] L. Asiminoaei, E. Aeloiza, P. N. Enjeti and F. Blaabjerg, "Shunt active-power-filter topology based on parallel interleaved inverters," IEEE Transactions on Industrial Electronics, vol. 55, no. 3, pp. 1175-1189, Mar 2008.

[13] A. Bhattacharya and C. Chakraborty, "A shunt active power filter with enhanced performance using ann-based predictive and adaptive controllers," IEEE Transactions on Industrial Electronics, vol. 58, no. 2, pp. 421 -428, Feb. 2011.

[14] S. Rahmani, N. Mendalek and K. Al-Haddad, "Experimental design of a nonlinear control technique for three-phase shunt active power filter," IEEE Transactions on Industrial Electronics, vol. 57, no. 10, pp. 3364 -3375, Oct. 2010.

[15] E. Babaei, M. F. Kangarlu and M. Sabahi, "Mitigation of voltage disturbances using dynamic voltage restorer based on direct converters," IEEE Transactions on Power Delivery, vol. 25, no. 4, pp. 2676 -2683, Oct. 2010.

[16] K. Zhang, Y. Kang, J. Xiong and J. Chen, "Direct repetitive control of spwm inverter for ups purpose," IEEE Transactions on Power Electronics, vol. 18, no. 3, pp. 784 - 792, May 2003.

[17] G. Modrijan, P. Zajec, J. Nastran, H. Lavric and D. Voncina, "An improved repetitive action corrector for reduction of steady-state error and nonlinear distortion in power amplifiers," Elektrotehniski Vestnik, vol. 73, no. 2-3, pp. 111-116, 2006.